Approved For Release 2008/02/12 : CIA-RDP94T00858R000601040001-8

DATA CENTER OPERATIONS BRANCH

NDS OPERATIONS PROCEDURE MANUAL
NO. P-C009

SYSTEMS SW & HW
13 April 1983

CONFIGURATION 1100/84

SYMBOLIC TITLE: N/A
ORIGINATOR: [redacted] STAT

Approved For Release 2008/02/12 : CIA-RDP94T00858R000601040001-8

Approved For Release 2008/02/12 : CIA-RDP94T00858R000601040001-8

P-C009

ADMINISTRATIVE-INTERNAL USE ONLY

30 September 1981

MEMORANDUM FOR: Chief, SPS

FROM [redacted] STAT

SUBJECT : 1100/84 Configuration Update

The attached 2 Diagrams are updates to the 1100/84 configuration document dated 2 September 1981. This update was necessary in order for the diagrams to correspond with the physical switch positions as connected by the UNIVAC customer engineers. In addition, the switches have been numbered on the diagrams. These numbers are being referred to in operating instructions.

[redacted] STAT

Distribution:
Original - Addressee
1 - CH/PB
1 - CH/OSS
1 - [redacted] STAT.
1 - [redacted]
1 - UNIVAC S.A.
1 - UNIVAC C.E.
1 - COTR
1 - Originator

ADMINISTRATIVE-INTERNAL USE ONLY
Approved For Release 2008/02/12 : CIA-RDP94T00858R000601040001-8

Approved For Release 2008/02/12 : CIA-RDP94T00858R000601040001-8

TAPE UNIT FOR SIP IS NOT AVAILABLE - CONTINUE YN (Table 3-17)
TAPE UNIT FOR I/O IS NOT AVAILABLE - CONTINUE YN

This message indicates that SIP is configured to tape (SBFILE = 1) and a tape drive is not available.

TAPE UNIT NOT AVAILABLE - ANS GO (Figure 12-4)

Displayed when there is not an available tape unit.

An answer of N will cause backout from SIP initialization.

Removal of the reason for failure, followed by answer Y to the message, should produce a successful SIP/Trace initialization.

site-id TERMINATING (Table 3-4)

Displayed in response to an UR *site-id* keyin. Indicates that the specified site-id is terminating.

sname TERMINATING (Table 3-4)

Displayed in response to an UR *sname* keyin. Indicates that the specified remote device is terminating.

THE DEVICE REQUESTED CANNOT BE FOUND IN THE MCT (11.10)

This message indicates a probable configuration problem during a boot attempt.

THE DISK PACK DOES NOT HAVE A VOL1 RECORD (11.3)

Indicates the disk pack does not have a vol1 record.

THE EQUIPMENT SPECIFIED IS UNDEFINED IN AACONFIG (11.10)

This message indicates a probable configuration problem during a boot attempt.

THERE ARE *nnn* ADDITIONAL INCORRECT SAU POSITIONS (4.8)

Displayed if the allowed number status messages have gone to the operator display console.

THERE IS NO CHAIN FOR EQUIPMENT CODE ..... (11.10)

This message indicates a probable configuration problem during a boot attempt.

THE SYSTEM DISK PACK IS NOT A DRS PACK (11.3)
DO YOU WANT TO SELECT A NEW DEVICE? RESPOND Y OR N

Before the EXEC is copied to the disk, the label of the pack is read to verify that it has been properly prepped. If the pack is not a DRS pack, the above message is displayed.

TIMEOUT AEQT (Table 7-4)

Processor has not received response from last function for six seconds.

Approved For Release 2008/02/12 : CIA-RDP94T00858R000601040001-8

Approved For Release 2008/02/12 : CIA-RDP94T00858R000601040001-8

TIMEOUT AET (Table 7-2)

Processor has not received response from last function for six seconds.

site-id TIMEOUT *device* AT (Table 4-4)

No response has been received from the remote 1004/DCT-2000 in an allotted time interval. Do not answer T unless authorized by the user or the site.

sname TIMEOUT AETQ (Table 7-6)

0770 printer error. If repetitive, reply Q or T as desirad and notify appropriate maintenance personnel.

TIMEOUT DURING REWIND OF { DUMP / BOOT } TAPE. (11.10)
REWIND MANUALLY { TO LOADPOINT / AND UNLOAD }, THEN ANSWER GO

Rewind of boot or dump tape unit has timed out.

sname TIMEOUT ERROR AET (Tables 7-1, 9-2, and 10-1)

This high-speed card reader, 9000 card reader, and 1004 card reader error message indicates the device did not respond to a command.

sname TIMEOUT ERROR AETQ (Tables 7-3, 9-3, and 10-1)

This high-speed punch, 9000 card punch or printer, and 1004 punch or printer error message indicates a timeout has occurred because the processor did not respond to the last command from the device.

name TIMEOUT ERROR** *c, ecod* RECOVER? YN (15.5.4)

The C/SP control program displays this message if the response to a command is not received in a specific amount of time.

aaa bbb/ccc/ddd/eee TIMOUT *ggg* ABGM (6.7)

A timeout occurred.

aaa bbb/ccc/ddd/eee TIMOUT RESOLVE AND ANSWER GO (6.7)

This message is displayed if the I/O request has not completed in the allotted time. The format of the message is dependent upon machine type.

block-id filename TLBL$ ERROR= *octal* |TLBL$ I/O ERROR= *octal* | (Table 3-7)

The I/O status encountered by TLBL$ is printed only if the TLBL$ error is 011.

device caunam/ioaunm/cuname TMCHK *run-id* AGM (Table 6-5)
device cpunam/cuname TMCHK *run-id* AGM

This is an informative message indicating a timing problem with an MSA-controlled device.

Approved For Release 2008/02/12 : CIA-RDP94T00858R000601040001-8

Approved For Release 2008/02/12 : CIA-RDP94T00858R000601040001-8

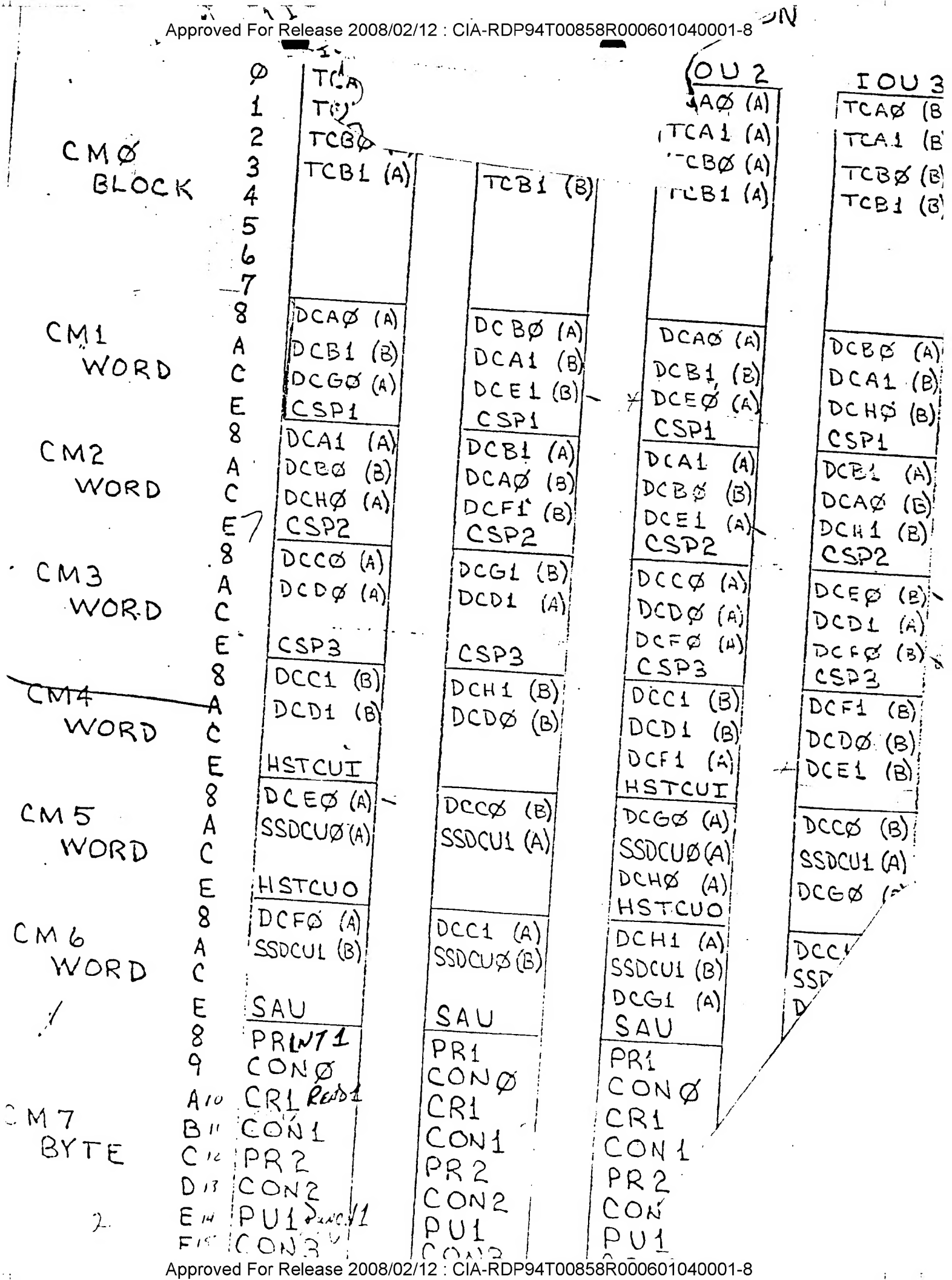

Approved For Release 2008/02/12 : CIA-RDP94T00858R000601040001-8

Approved For Release 2008/02/12 : CIA-RDP94T00858R000601040001-8

11ØØ/84 TRANSFER SWITCH ASSIGNMENTS: INTERIM CONFIGURATION

DCA Ø (A)	DCB Ø (B)	DCC Ø (A)	DCD Ø (A)	SSDCU Ø (A)
4Ø IØ	I2 CM2 (A)	I2 CM3 (B)	I2 CM3 (A)	4Ø IØ
IØ CM1 (B)	IØ CM2 (A)	IØ CM3 (B)	IØ CM3 (A)	IØ CM5 (A)
1	2	3	4	5

DCA 1 (A)	DCB 1 (B)	DCC 1 (B)	DCD 1 (B)	SSDCU 1 (B)
4Ø IØ	I2 CM1 (A)	I2 CM4 (B)	I2 CM4 (A)	4Ø IØ
IØ CM2 (B)	IØ CM1 (A)	IØ CM4 (B)	IØ CM4 (A)	IØ CM6 (A)
6	7	8	9	1Ø

CSP1 (A)	CSP2 (A)	CSP3 (A)	CSP1 (C)	CSP (C)
4Ø IØ	4Ø IØ	4Ø IØ	4Ø I2 8Ø I3	4Ø 8Ø
IØ CM1 (E)	IØ CM2 (E)	IØ CM3 (E)	8Ø IØ 4Ø IØ	8Ø 4Ø
11	12	13	14	15

D E F

DCA Ø (B)	DCB Ø (A)	DCC Ø (B)	DCD Ø (B)	SSDCU Ø (B)
I3 CM2 (A)	I3 CM1 (B)	I3 CM5 (B)	I3 CM4 (A)	I3 CM6 (A)
4Ø I2	I1 CM1 (B)	I1 CM5 (B)	I1 CM4 (A)	4Ø I2
16	17	18	19	2Ø

DCA 1 (B)	DCB 1 (A)	DCC 1 (A)	DCD 1 (A)	SSDCU 1 (A)
I3 CM1 (A)	I3 CM2 (B)	I3 CM6 (B)	I3 CM3 (A)	I3 CM5 (A)
4Ø I2	I1 CM2 (B)	I1 CM6 (B)	I1 CM3 (A)	4Ø I2
21	22	23	24	25

CSP1 (B)	CSP2 (B)	CSP3 (B)	CSP2 (C)	CSP (D)
I3 CM1 (E)	I3 CM2 (E)	I3 CM3 (E)	4Ø I2 8Ø I3	CSP
4Ø I2	4Ø I2	4Ø I2	8Ø IØ 4Ø IØ	CSP
26	27	28	29	3Ø

NON-REMOTED

See Fwd

See Fwd

HSTS	DCF Ø (A)	DCG Ø (A)	DCH Ø (A)	HSTS
IØ CM4 (A) I CM5 (B)	IØ CM6 (B)	IØ CM1 (C)	IØ CM2 (C)	IØ
4Ø	4Ø	4Ø	4Ø	I2

HSTS	DCF L (B)	DCG L (B)	DCH L (B)	CSP (E)
I2 CM4 (A) I CM5 (B)	4Ø I2	4Ø I2	4Ø I2	CSP1
4Ø	I3	I3	I3	CSP2 or CSP3

Approved For Release 2008/02/12 : CIA-RDP94T00858R000601040001-8

Approved For Release 2008/02/12 : CIA-RDP94T00858R000601040001-8

DCA Ø (A)	DCB Ø (B)	DCC Ø (A)	DCD Ø (A)	SSDCU Ø (A)
I 2 CM1 (9) I Ø CM1 (8)	I 2 CM2 (A) I Ø CM2 (A)	I 2 CM3 (8) I Ø CM3 (9)	I 2 CM3 (A) I Ø CM3 (A)	I 2 CM5 (A) I Ø CM5 (A)
1	2	3	4	5

DCA 1 (A)	DCB 1 (B)	DCC 1 (B)	DCD 1 (B)	SSDCU 1 (B)
I 2 CM2 (8) I Ø CM2 (2)	I 2 CM1 (A) I Ø CM1 (A)	I 2 CM4 (2) I Ø CM4 (2)	I 2 CM4 (A) I Ø CM4 (A)	I 2 CM6 (A) I Ø CM6 (A)
6	7	8	9	10

CSP1 (A)	CSP2 (A)	CSP3 (A)	CSP1 (C)	CSP (C)
I 2 CM1 (E) I Ø CM1 (E)	I 2 CM2 (E) I Ø CM2 (E)	I 2 CM3 (E) I Ø CM3 (E)	I 1 - I 3 I Ø - I 2	I 1 - I Ø -
11	12	13	14	15

CA Ø (B)	DCB Ø (A)	DCC Ø (B)	DCD Ø (B)	SSDCU Ø (B)
I 3 CM2 (A) I 1 CM2 (A)	I 3 CM1 (8) I 1 CM1 (8)	I 3 CM5 (8) I 1 CM5 (8)	I 3 CM4 (A) I 1 CM4 (A)	I 3 CM6 (A) I 1 CM6 (A)
16	17	18	19	20

DCA 1 (B)	DCB 1 (A)	DCC 1 (A)	DCD 1 (A)	SSDCU 1 (A)
I 3 CM1 (A) I 1 CM1 (A)	I 3 CM2 (8) I 1 CM2 (8)	I 3 CM6 (8) I 1 CM6 (9)	I 3 CM3 (A) I 1 CM3 (A)	I 3 CM5 (A) I 1 CM5 (A)
21	22	23	24	25

CSP1 (B)	CSP2 (B)	CSP3 (B)	CSP2 (C)	CSP (D)
I 3 CM1 (E) I 1 CM1 (E)	I 3 CM2 (E) I 1 CM2 (E)	I 3 CM3 (E) I 1 CM3 (E)	I 1 - I 3 I Ø - I 2	CSP CSP
26	27	28	29	30

NON-REMOTED

DCE Ø (A)	DCF Ø (A)	DCG Ø (A)	DCH Ø (A)	HSTS
I Ø CM5 (2)	I Ø CM6 (8)	I Ø CM1 (C)	I Ø CM2 (C)	GREEN I Ø CM4 (E) I CM5 (E) O
I 2 CM1 (C)	I 2 CM3 (C)	I 2 CM5 (8)	I 2 CM5 (C)	I 2 WHITE CM4 (E) I CM5 (E) O

DCE L (B)	DCF L (B)	DCG L (B)	DCH L (B)	CSP (E)
I 1 CM1 (C)	I 1 CM2 (C)	I 1 CM3 (9)	I 1 CM4 (8)	CSP1
I 3 CM4 (C)	I 3 CM4 (8)	I 3 CM6 (C)	I 3 CM2 (C)	CSP2 OR CSP3

Approved For Release 2008/02/12 : CIA-RDP94T00858R000601040001-8

Approved For Release 2008/02/12 : CIA-RDP94T00858R000601040001-8

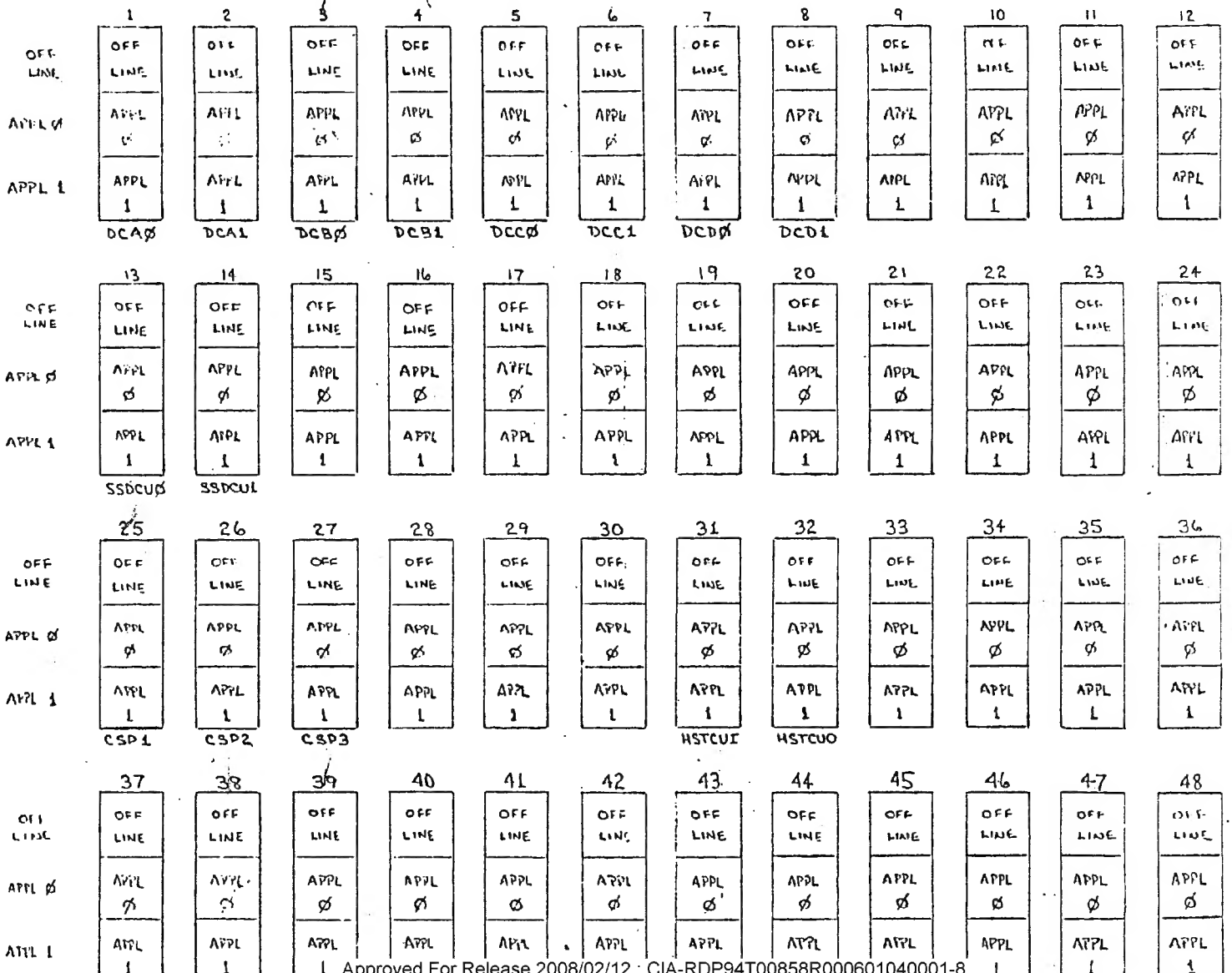

Approved For Release 2008/02/12 : CIA-RDP94T00858R000601040001-8

Approved For Release 2008/02/12 : CIA-RDP94T00858R000601040001-8

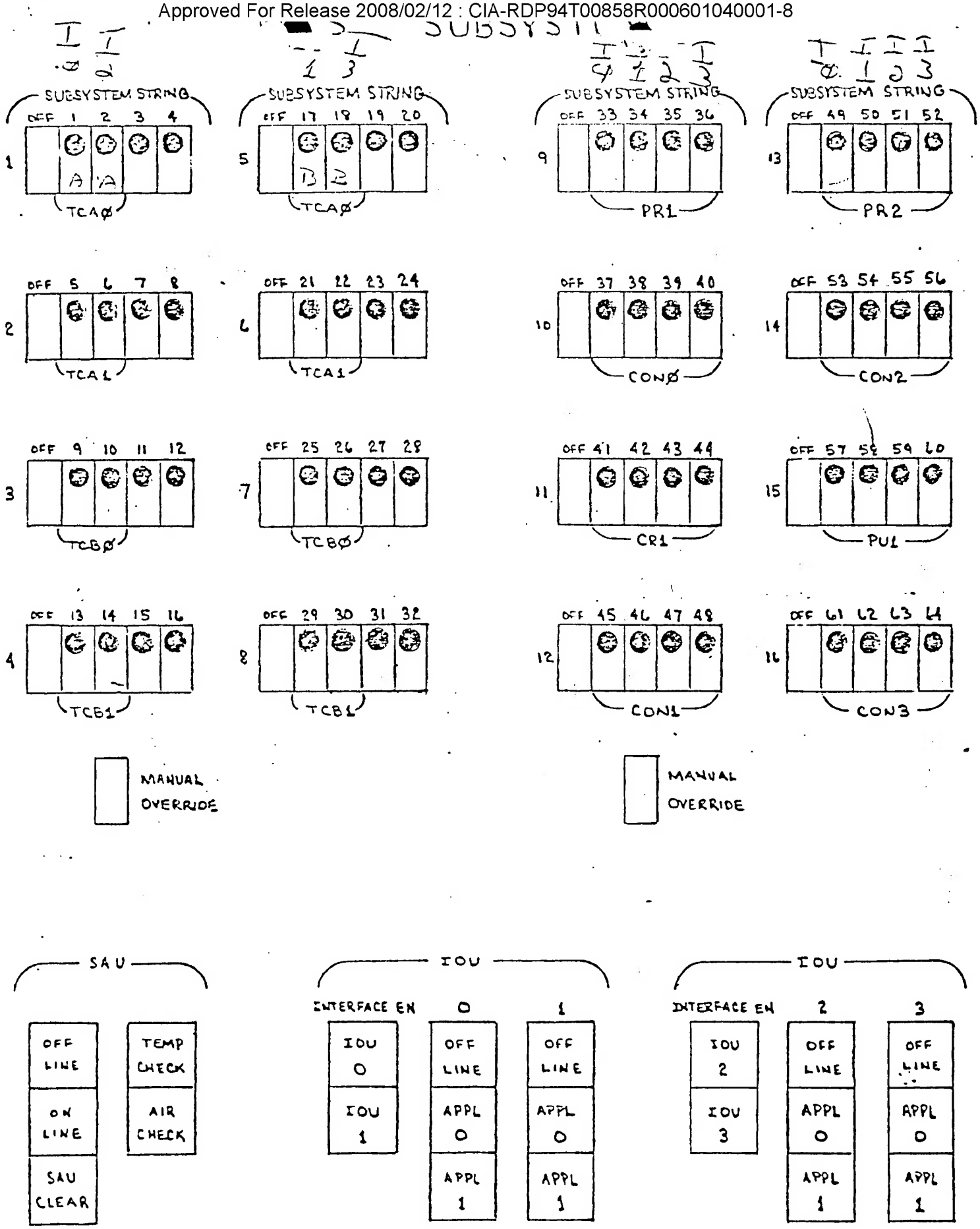

Approved For Release 2008/02/12 : CIA-RDP94T00858R000601040001-8

Approved For Release 2008/02/12 : CIA-RDP94T00858R000601040001-8

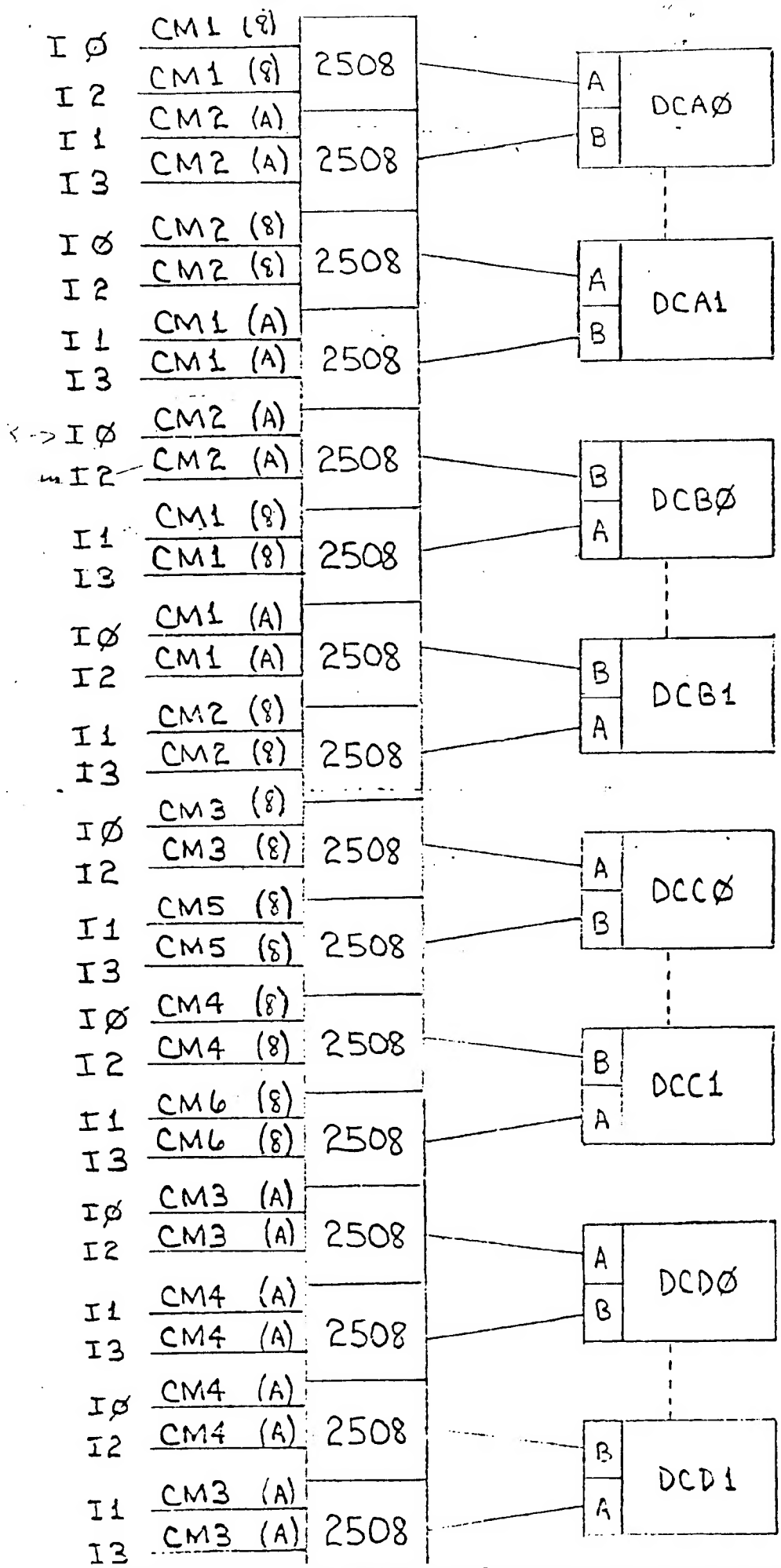

Approved For Release 2008/02/12 : CIA-RDP94T00858R000601040001-8

Approved For Release 2008/02/12 : CIA-RDP94T00858R000601040001-8

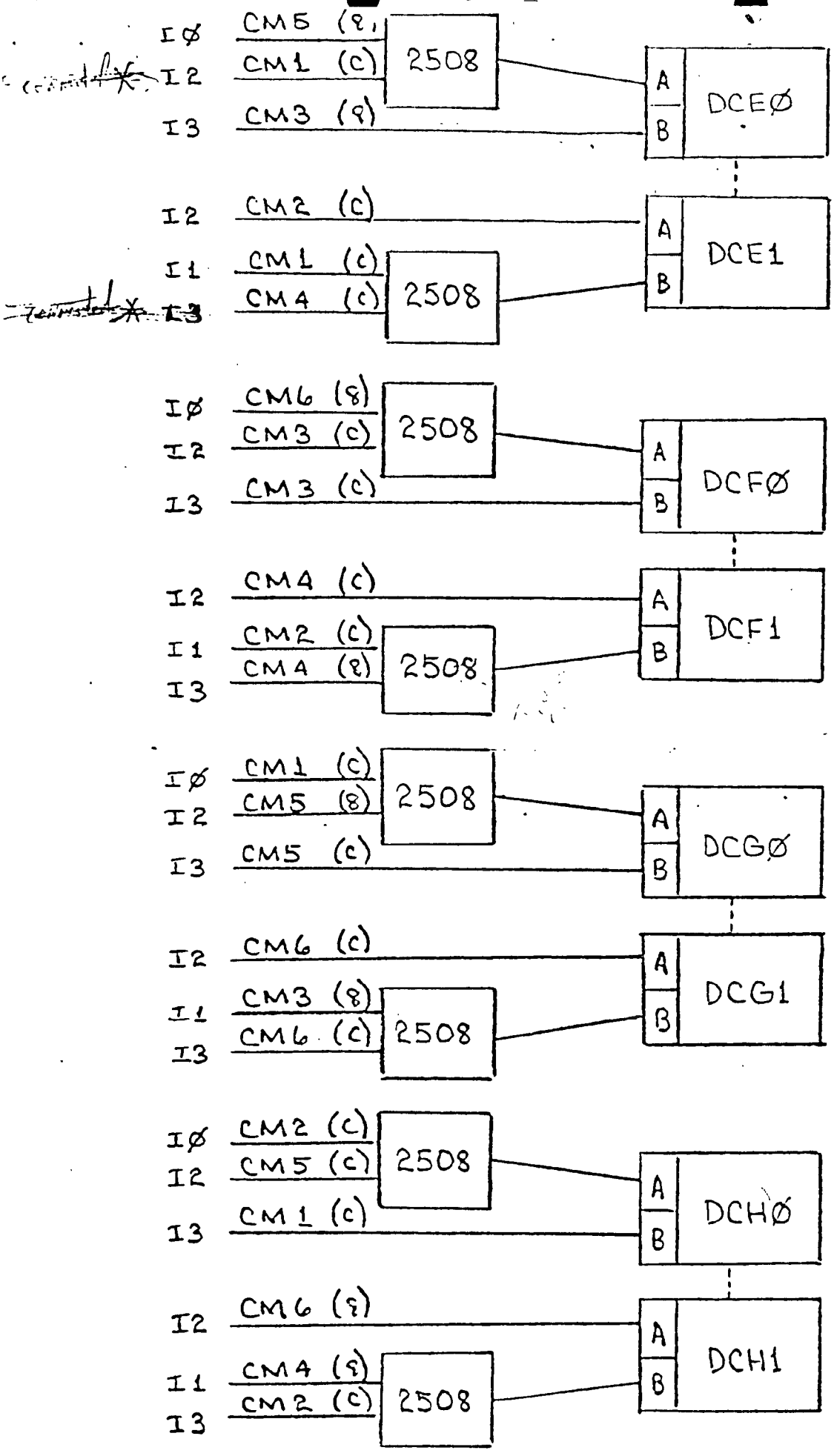

Approved For Release 2008/02/12 : CIA-RDP94T00858R000601040001-8

Approved For Release 2008/02/12 : CIA-RDP94T00858R000601040001-8

SOLID STATE DRUMS

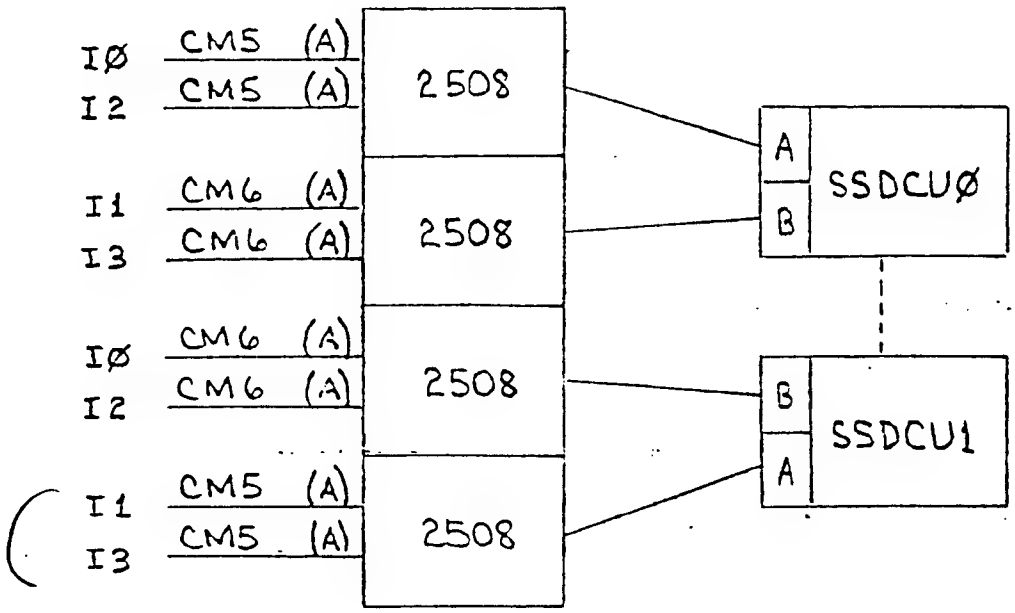

Approved For Release 2008/02/12 : CIA-RDP94T00858R000601040001-8

Approved For Release 2008/02/12 : CIA-RDP94T00858R000601040001-8

C/SP CONFIGURATION

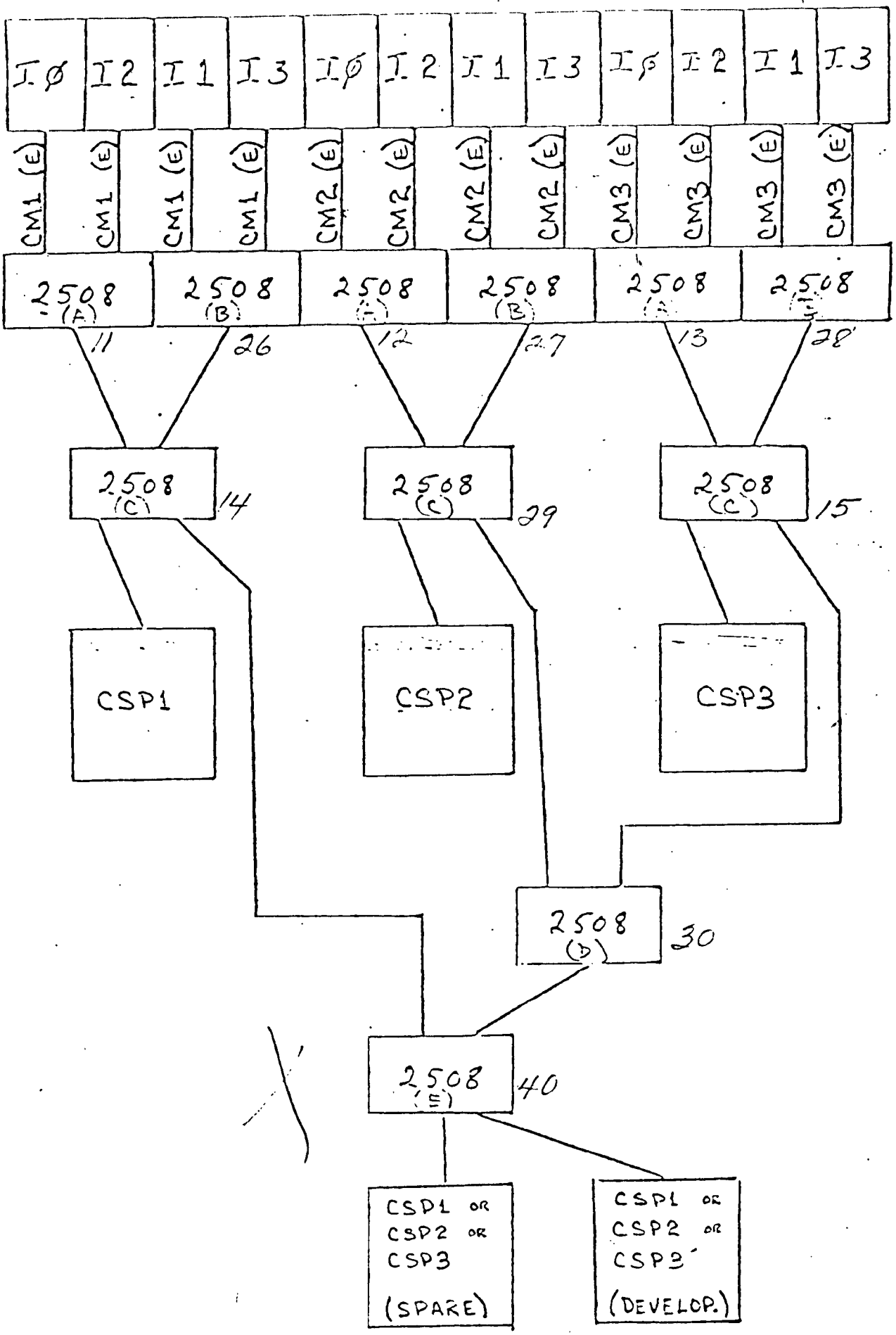

Approved For Release 2008/02/12 : CIA-RDP94T00858R000601040001-8

Approved For Release 2008/02/12 : CIA-RDP94T00858R000601040001-8

TAPE CONTROL UNITS

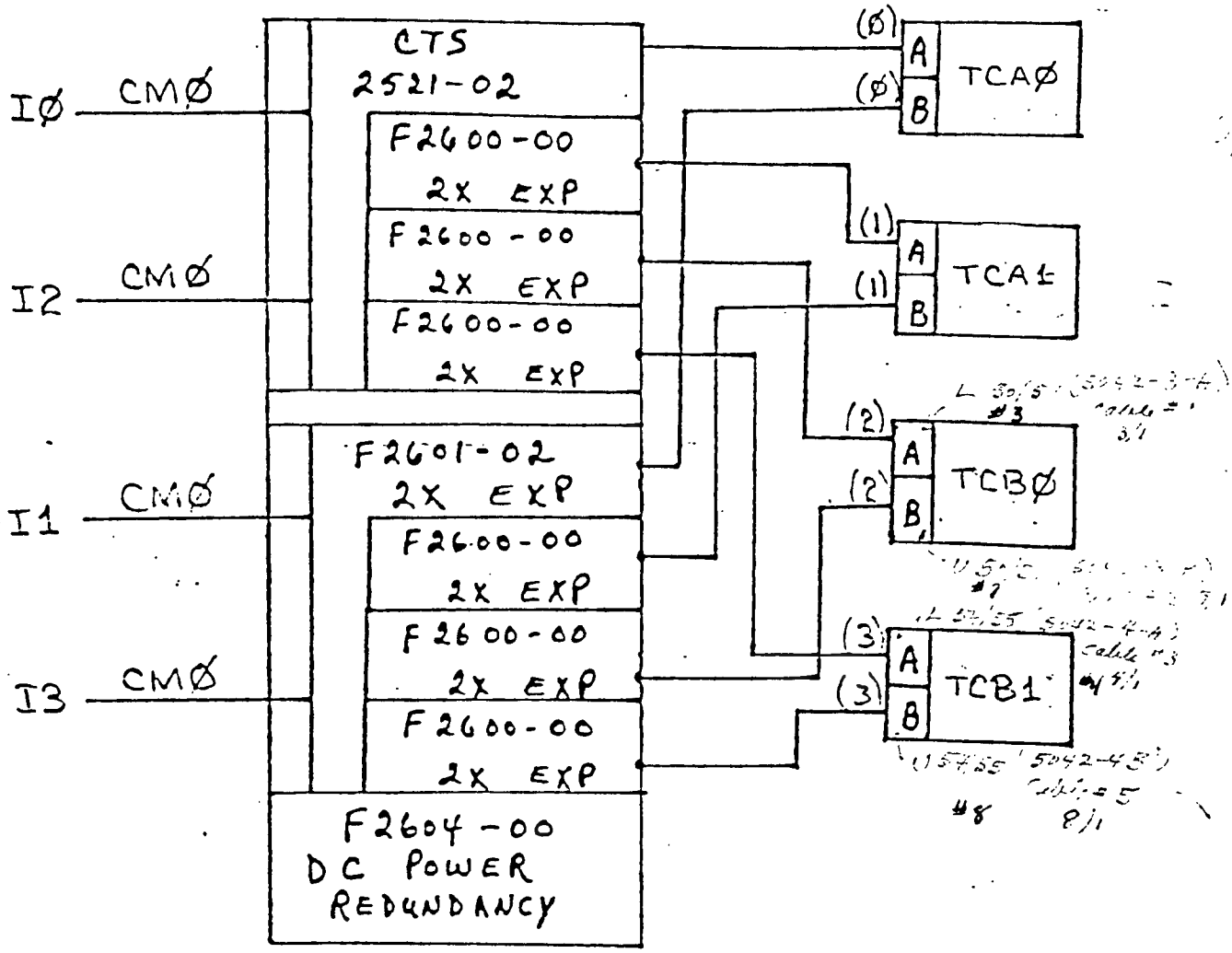

Approved For Release 2008/02/12 : CIA-RDP94T00858R000601040001-8

Approved For Release 2008/02/12 : CIA-RDP94T00858R000601040001-8

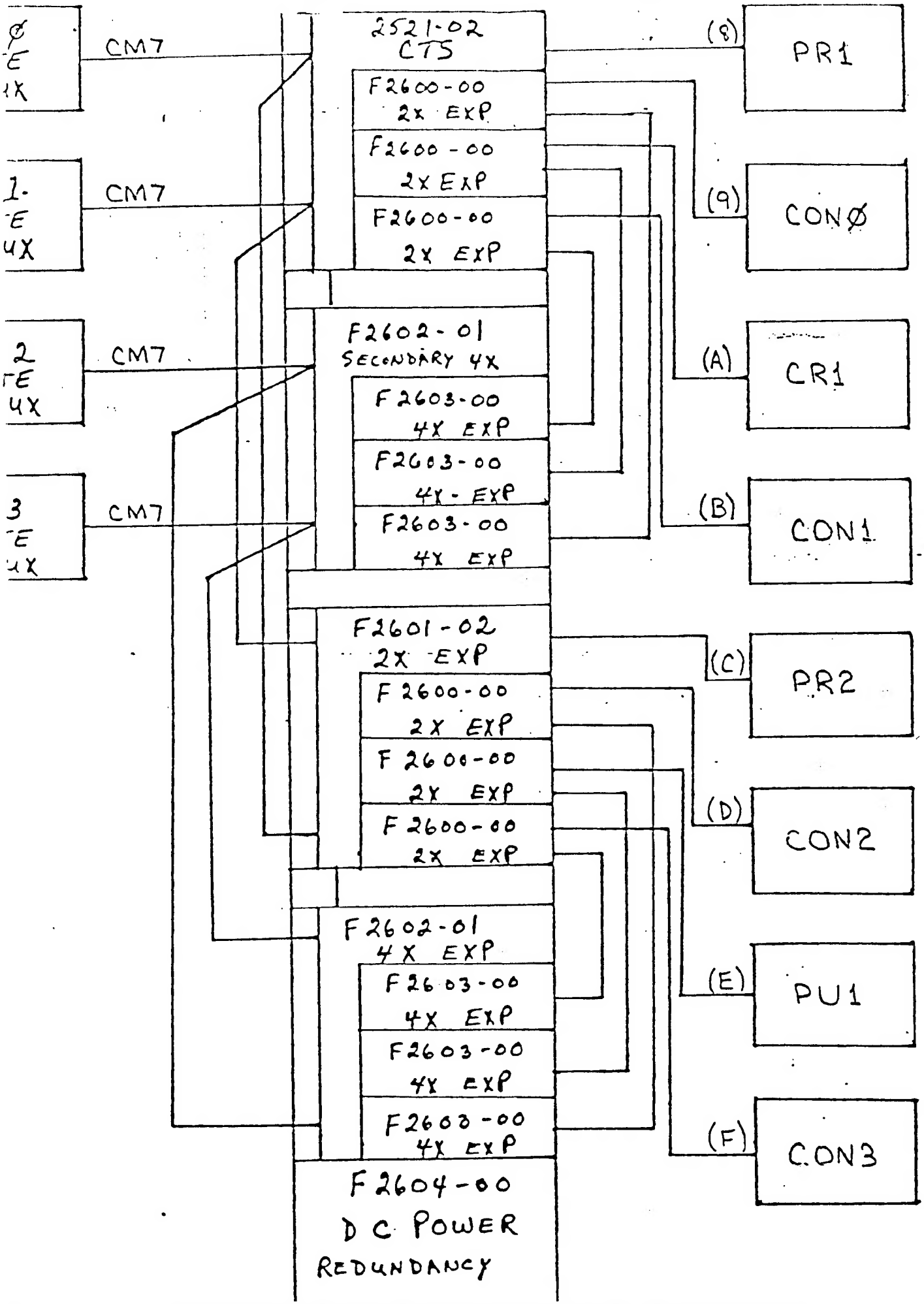

Approved For Release 2008/02/12 : CIA-RDP94T00858R000601040001-8

Approved For Release 2008/02/12 : CIA-RDP94T00858R000601040001-8

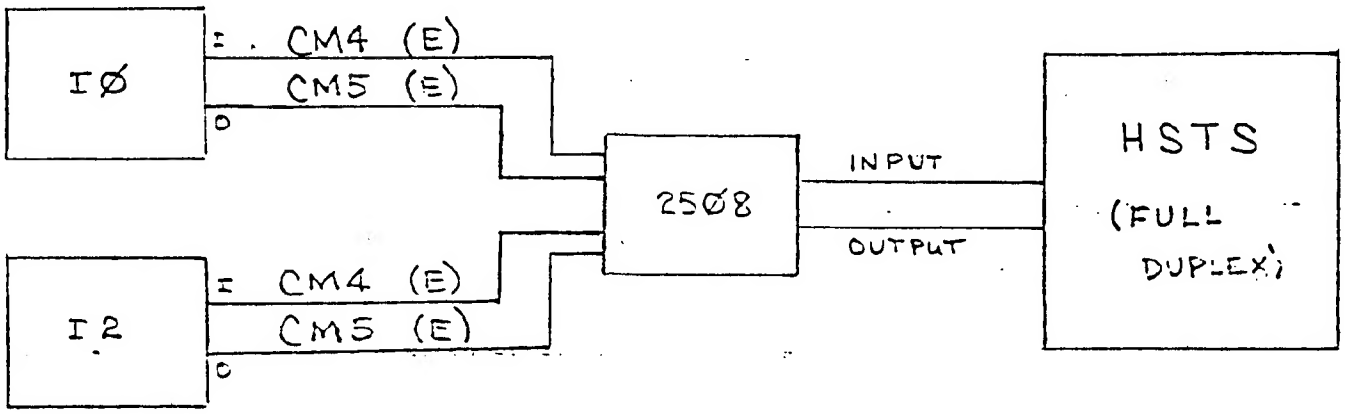

Approved For Release 2008/02/12 : CIA-RDP94T00858R000601040001-8

Approved For Release 2008/02/12 : CIA-RDP94T00858R000601040001-8

SYSTEM MAINTENANCE UNITS

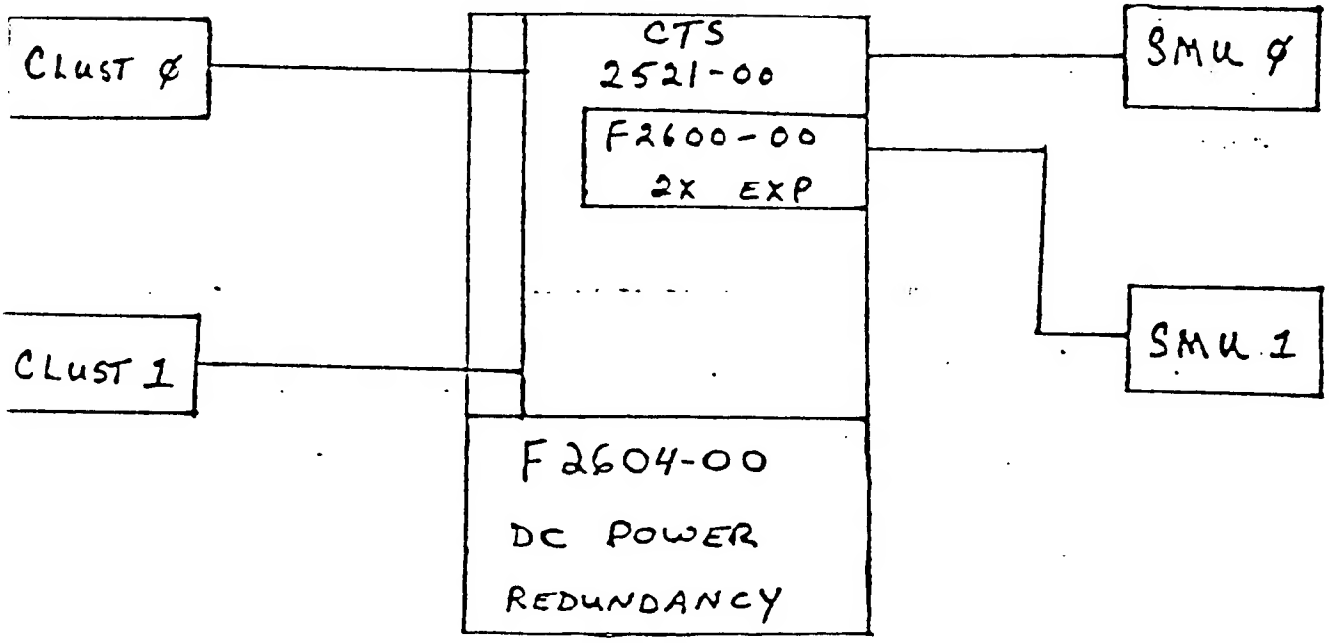

Approved For Release 2008/02/12 : CIA-RDP94T00858R000601040001-8

Approved For Release 2008/02/12 : CIA-RDP94T00858R000601040001-8

September 2, 1981

MEMORANDUM FOR: CHIEF, SPS

FROM [redacted] STAT

SUBJECT : 1100/84 Configuration

The attached document is the revised 1100/84 configuration. The following changes have been made since the previous release of this document (Aug 20, 1981).

1. The control unit names are changed to match the names used in the "SYSGEN".

2. The position of the current CACHE-DISK subsystem was changed. It is now named "DCA0" and "DCA1"

3. Two new diagrams have been added:

   a. MULTI-ACCESS SUBSYSTEMS - This indicates the positioning of "word-channel-module" devices on the SAU

   b. BCTS SUBSYSTEMS - This diagram shows the positioning of "BYTE-MUX" and "BLOCK-MUX" devices on the SAU

[redacted] STAT

Distribution:
1 - Addressee
1 - COTR
1 - CH/PB
1 - CH/OSS
1 - [redacted] STAT
1 -
1 - UNIVAC S.A.
- UNIVAC C.E.
- Originator

Approved For Release 2008/02/12 : CIA-RDP94T00858R000601040001-8